PART NO.	REV	DESCRIPTION
75440	B	TERMINAL CUP
75440-01	B	P.C. BOARD

REVISIONS						
CHG	LTR	DESCRIPTION	DRFT	CHK	DA	APR
170T	A	REL FOR PROD 75440, 75440-01	SP	MV	3/9/93	DHR
541T	B	ADDED NOTE 10	VAL			

NSR4732A

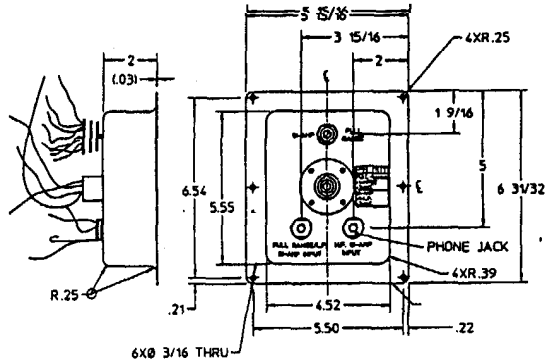

75440
TERMINAL CUP

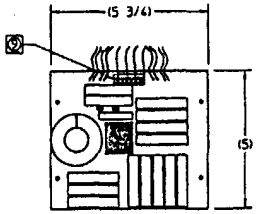

75440-01
P.C. BOARD

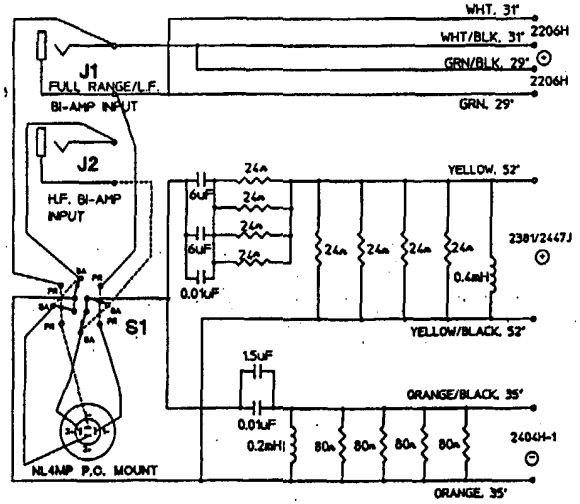

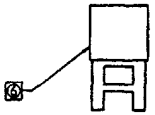

10. ALL INDUCTORS TO BE SECURED IN PLACE WITH WIRE TIE AND RTV (SILICONE) UNDER BOBBIN SUPPORT. RTV NOT TO CONTACT WIRE WHERE POSSIBLE.

⊗ MUST BE KEYED CONNECTOR (CAN ONLY BE CONNECTED ONE WAY).

8. INDUCTORS: ± 5% @ 1 KHZ, DCR < 0.25 OHMS, SATURATION 7A MIN, HYSTERESIS ± 2 %

7. CAPACITORS: 0.01uF ± 10% @ 1 KHZ, D.F. < 2 %, 200V POLYPROPYLENE
ALL OTHERS ± 10% (UNLESS NOTED DIFFERENTLY) @ 1 KHZ, D.F. < 2 %, 200V MYLAR

⊗ RESISTORS: 10 WATT, NO RTV REQUIRED BETWEEN RESISTORS (MUST BE TWO LEG/FOUR PIN TYPE)

5. NEUTRICK: NL4MP P.C. MOUNT VERSION OF 4 PIN NEUTRICK CONNECTOR (AIR TIGHT)

4. S1 TO BE TWO POSITION ROTARY SWITCH (ON-ON) WIRED FOR 6A MINIMUM RATING BY PARALLELING TWO SWITCH SECTION TOGETHER AS SHOWN.
BA- BI-AMP MODE
FR- FULL RANGE MODE

3. PHONE JACK (1/4' SWITCHCRAFT) TO BE INSULATED FROM TERMINAL CUP.

2. TERMINAL CUP TO BE 0.8MM THK STEEL, POWDERCOATED BLACK.

1. TERMINAL CUP SIMILAR IN SIZE ONLY, TO PART NO. 69691-XX.
TERMINAL CUP TO FIT A CUTOUT 6' X 7' WITH 1/4'R CORNERS.

⊙ OUTWARD CONE MOVEMENT WITH POSITIVE VOLTAGE TO RED INPUT TERMINAL.

⊖ INWARD CONE MOVEMENT WITH POSITIVE VOLTAGE TO RED INPUT TERMINAL.

NOTES: (UNLESS OTHERWISE SPECIFIED)

QTY	ITEM	PART NO.	PART/MATERIAL	REMARKS

BILL OF MATERIAL

TOLERANCES

DRAWN 3/3/93 S.POWELL
ENGINEER
HV 3/9/93
D. RIVERA
SR4732A

HARMAN SPEAKER MANUFACTURING
A Harman International Company
Northridge, California 91329, U.S.A.

TITLE TERM CUP/P.C. BOARD

SIZE D | 75440-XX | B

SCALE NONE SHEET 1 OF 1